FIRST ANGLE PROJECTION

ALL DIMENSIONS ARE IN mm

DRG. NO. 39513800194

VAR. NO.	DESCRIPTION	A (INSIDE)	B (OUTSIDE)	C (P.C.D)	D	E	F (tk.)	G	H	R	Wt. (kg)
01	DIA 400 BFV DOOR SEAL	Ø311±0.3	Ø375±0.3	338	20	Ø12	10	-	-	5	0.76
02	DIA 400(16 ATA) BFV DOOR SEAL	Ø311±0.3	Ø375±0.3	338	20	Ø12	12	-	-	6	0.91
03	DIA 450 BFV DOOR SEAL	Ø361±0.3	Ø425±0.3	388	24	Ø12	10	-	-	5	0.86
04	DIA 500 BFV DOOR SEAL	Ø406±0.3	Ø470±0.3	438	24	Ø12	10	Ø458	8°	3	0.97
05	DIA 500(16 ATA) BFV DOOR SEAL	Ø390±0.3	Ø470±0.3	428	24	Ø12	15	-	-	7.5	1.81
06	DIA 600 BFV DOOR SEAL	Ø511±0.3	Ø575±0.3	538	32	Ø12	10	-	-	5	1.20
07	DIA 600(16 ATA) BFV DOOR SEAL	Ø495±0.3	Ø575±0.3	533	32	Ø12	15	-	-	7.5	2.24
08	DIA 700 BFV DOOR SEAL	Ø606±0.3	Ø670±0.3	632	36	Ø12	12	-	-	6	1.69
09	DIA 800 BFV DOOR SEAL	Ø706±0.3	Ø770±0.3	732	40	Ø12	12	-	-	6	1.96
10	DIA 900 BFV DOOR SEAL	Ø806±0.3	Ø870±0.3	832	48	Ø12	12	-	-	6	2.22
11	DIA 1000 BFV DOOR SEAL	Ø906±0.3	Ø970±0.3	937	48	Ø12	10	-	-	5	2.09
12	DIA 1200 BFV DOOR SEAL	$Ø1096^{+0.4}_{-0.6}$	$Ø1160^{+0.6}_{-0.4}$	1124	60	Ø12	12	-	-	6	3.01
13	DIA 1400 BFV DOOR SEAL	$Ø1296^{+0.4}_{-0.6}$	$Ø1360^{+0.6}_{-0.4}$	1324	72	Ø12	12	-	-	6	3.54
14	DIA 1600 BFV DOOR SEAL	$Ø1460^{+0.4}_{-0.6}$	$Ø1560^{+0.6}_{+0.4}$	1510	72	Ø13.5	15	Ø1534	15°	5	8.00
15	DIA 1800 BFV DOOR SEAL	$Ø1650^{+0.4}_{-0.6}$	$Ø1750^{+0.6}_{+0.4}$	1700	84	Ø13.5	15	Ø1720	15°	5	8.99
16	DIA 1900 BFV DOOR SEAL	$Ø1750^{+0.4}_{-0.6}$	$Ø1850^{+0.6}_{-0.4}$	1800	90	Ø13.5	15	Ø1820	15°	5	9.51
17	DIA 2000 BFV DOOR SEAL	$Ø1870^{+0.4}_{-0.6}$	$Ø1950^{+0.6}_{-0.4}$	1910	96	Ø13.5	15	Ø1934	15°	5	7.98
18	DIA 2200 BFV DOOR SEAL	$Ø2070^{+0.6}_{-1.4}$	$Ø2150^{+1.4}_{-0.6}$	2110	100	Ø13.5	15	Ø2134	10°	3	8.84
19	DIA 2300 BFV DOOR SEAL	$Ø2150^{+0.6}_{-1.4}$	$Ø2250^{+1.4}_{-0.6}$	2200	108	Ø13.5	15	Ø2220	15°	5	11.64
20	DIA 2400 BFV DOOR SEAL	$Ø2250^{+0.6}_{-1.4}$	$Ø2350^{+1.4}_{-0.6}$	2300	110	Ø13.5	15	Ø2320	15°	5	12.18
21	DIA 2500 BFV DOOR SEAL	$Ø2350^{+0.6}_{-1.4}$	$Ø2450^{+1.4}_{-0.6}$	2400	112	Ø13.5	15	Ø2420	15°	5	12.72
22	DIA 2700 BFV DOOR SEAL	$Ø2550^{+0.6}_{-1.4}$	$Ø2650^{+1.4}_{-0.6}$	2600	120	Ø13.5	15	Ø2620	15°	5	13.79
23	DIA 1700 BFV DOOR SEAL	$Ø1550^{+0.4}_{-0.6}$	$Ø1650^{+0.6}_{-0.4}$	1600	84	Ø13.5	15	Ø1620	15°	5	8.44
24	DIA 2600 BFV DOOR SEAL	$Ø2450^{+0.6}_{-1.4}$	$Ø2550^{+1.4}_{-0.6}$	2500	116	Ø13.5	15	Ø2520	15°	5	13.26
25	DIA 2800 BFV DOOR SEAL	$Ø2650^{+0.6}_{-1.4}$	$Ø2750^{+1.4}_{-0.6}$	2700	120	Ø13.5	15	Ø2720	15°	5	14.32
26	DIA 1100 BFV DOOR SEAL	$Ø1006^{+0.4}_{-0.6}$	$Ø1070^{+0.6}_{-0.4}$	1038	56	Ø12	12	-	-	6	2.72
27	DIA 1300 BFV DOOR SEAL	$Ø1196^{+0.4}_{-0.6}$	$Ø1260^{+0.6}_{-0.4}$	1224	64	Ø12	12	-	-	6	3.28

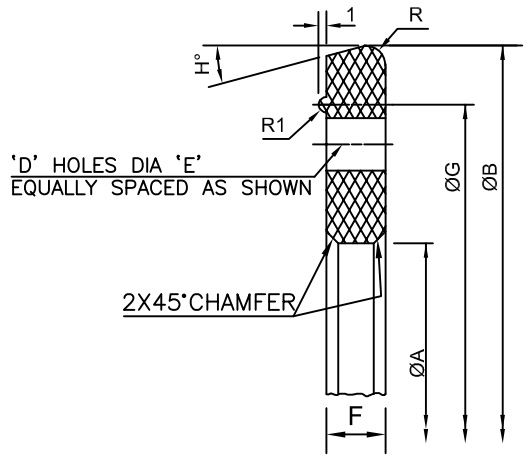

SECTION A–A

(FOR VAR–04,14–25)

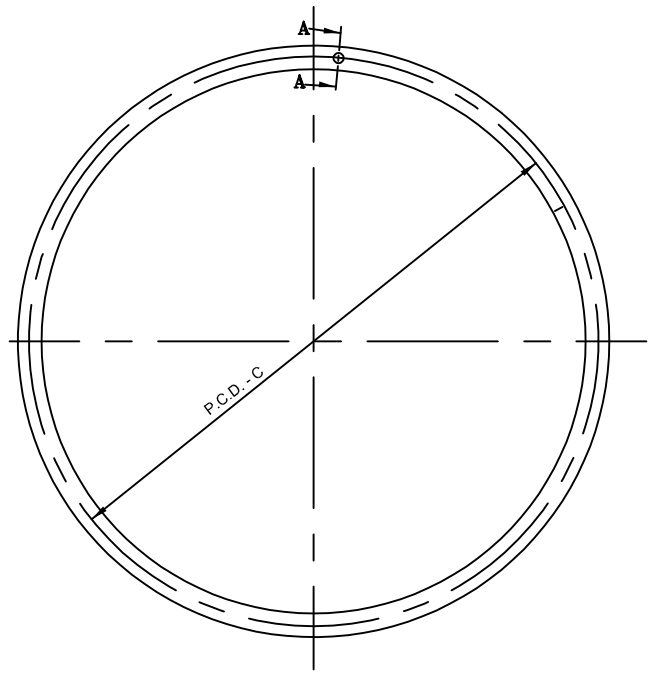

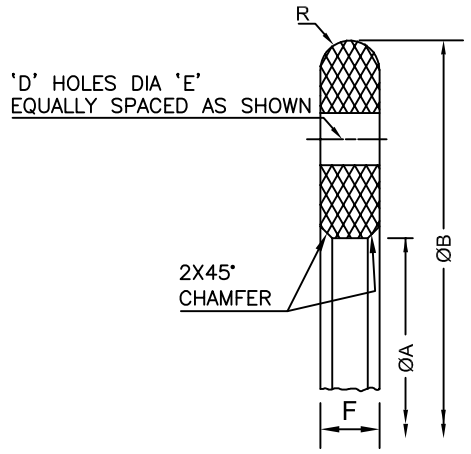

SECTION A–A

(FOR VAR–01,02,03,05–13 & 26,27)

TECHNICAL REQUIREMENTS

1. MATERIAL :- ACRYLO NITRILE SYNTHETIC RUBBER TO BS 2751 BA-70.
2. POLYMER IDENTIFICATION: THE MATERIAL WHEN IDENTIFIED BY SPECTROMETER OR BY ANY OTHER CONVENTIONAL METHOD SHALL BE OF BUTADIENE ACRYLONITRILE COPOLYMER.
3. MECHANICAL PROPERTIES : BEFORE AGEING
   (a) SHORE HARDNESS = 65°-70° (IRHD). (b) TENSILE STRENGTH = 12.5 MPa. (c) ELONG = 250%.
4. ACCLERATED AGEING TEST IS TO BE DONE BY HEATING IN AIR AS PER BS AT 110 +/- 5°C FOR 168 HOURS. AFTER AGEING TEST, 15% REDUCTION IN THE MECHANICAL PROPERTIES AS GIVEN IN TR-2 IS ALLOWED.
5. THE MATERIAL OF DOOR SEAL SHALL BE CAPABLE OF WITHSTANDING OZONE RESISTANCE TEST AS PER ASTM-D1149 (USE 50 PARTS PER 100 MILLION MINIMUM OZONE CONCENTRATION). THE TEST SHALL BE CONDUCTED ON UNSTRESSED SAMPLES FOR 70 HRS. AT 104°F. THERE SHALL BE NO VISIBLE CRACKING IN THE SURFACE OF TEST SAMPLE AFTER COMPLETION OF THE TEST.
6. THE RUBBER MATERIAL SHALL HAVE LESS THAN 2% VOLUME INCREASE WHEN TESTED IN ACCORDANCE WITH ASTM D471 AFTER BEING IMMERSED IN DISTILLED WATER AT 73.4°F ±2°F FOR 70 HOURS.
7. THE RUBBER COMPOUNDS SHALL NOT CONTAIN MORE THAN 8 PPM OF COPPER ION AND SHALL INCLUDE COPPER INHIBITORS TO PREVENT COPPER DEGRADATION OF THE RUBBER MATERIAL.
8. SEAL TO BE MOLDED ENDLESS, ANY GLUED JOINTS ARE NOT ACCEPTABLE.
9. MATERIAL SHALL HAVE SMOOTH FINISH AND SHALL BE FREE FROM GRIT, EXTRANEOUS MATTER, SURFACE IMPERFECTIONS & CRACKS ETC.
10. WHEN STORED UNDER COVER IN DRY PLACE UNDER NORMAL STORAGE CONDITION THE MATERIAL SHALL RETAIN PROPERTIES PRESCRIBED FOR A PERIOD NOT LESS THAN 24 MONTHS FROM DATE OF DISPATCH.
11. MATERIAL SHALL BE PACKED TO PREVENT DAMAGE FROM CONTAMINATION AND HANDLING DURING TRANSIT.
12. THREE SAMPLES OF SHEETS OF FOLLOWING SIZE PREPARED FROM SAME BATCH AND VULCANISED TO THE SAME DEGREE AS THE CONSIGNMENT CONCERN SHALL BE SUBMITTED FOR TESTING.
    a. 150 X 150 X 2 ±0.15 mm Thk. - 2 Nos.
    b. 150 X 150 X 6.3 ± 0.15 mm Thk. - 1 No.
13. TOLERANCE : FOR DIMENSION A & B ARE AS PER DRG & FOR OTHER DIMENSIONS ARE CLASS M2 OF BS ISO 3302 - 1 CAN BE REFERRED.

QTY VAR00	REMARKS	VAR. NO.	ITEM NO.	DESCRIPTION	STD	DRAWING NO.	IT.NO.	MATL. CODE	C	UNIT WT.	GS	ZONE
							VAR.	MATL. SPCN.	A-C	QTY.		

28 —— CARD TYPE-3 | 28 —— CARD TYPE-1 | 28 —— CARD TYPE-2

ADDITIONAL INFORMATION

STATUS OF DRAWING

DISTRIBUTION OF PRINTS

उत्पाद का प्रकार या ग्राहक/परियोजना का नाम
TYPE OF PRODUCT OR NAME OF CUSTOMER/PROJECT

STANDARD

भारत हेवी इलेक्ट्रिकल्स लिमिटेड
भोपाल
BHARAT HEAVY ELECTRICALS LTD.
BHOPAL

	नाम/ NAME	हस्ता./ SIGN.	दिनांक/DATE
बनाया DRN.	SARVESH	सर्वेश	13.08.15
जाँचा CKD.	S.K.MAHTO		13.08.15
स्वीकृत APPD.	MAYANK JAIN		13.08.15

REV.	DATE			REV.	DATE		
02	18.09.20	ALTERED सर्वेश अष्ठाना सर्वेश		01	20.08.19	ALTERED सर्वेश अष्ठाना सर्वेश	
		CHECKED संतोष कुमार महतो				CHECKED संतोष कुमार महतो	
		APPROVED ए.के.माथौर				APPROVED सुजीत के विश्वास	
	VAR–23 TO 27 ADDED & TOLERANCES A & B UPDATED.				PCD FOR VAR–04 UPDATED		

विभाग CODE DEPT: कोड 411 CODE | उन.टल.नाप की श्रेणी UNTOL. DIMS. GR.: - | अनुपात SCALE: N.T.S. | भार (कि.ग्रा.) WEIGHT (K.G.): — | उसे.ड्रॉइंग का संदर्भ REF. TO ASSY. DRG.: - | मद क. ITEM NO.: - | मद संख्या NO. OF ITEM: -

शीर्षक/TITLE: DOOR SEAL FOR B.F.V.

ड्रॉइंग क./DRAWING NO.: 39513800194

पुन. REV.: 02

पृष्ठ क./SHT. NO. 01 | पृष्ठों की संख्या/NO. OF SHT. 01

THE INFORMATION ON THIS DOCUMENT IS THE PROPERTY OF BHARAT HEAVY ELECTRICALS LIMITED.
IT MUST NOT BE USED DIRECTLY OR INDIRECTLY IN ANY WAY DETRIMENTAL TO THE INTEREST OF THE COMPANY.

REF. DRG. NO. | SIGN AND DATE | INVENTORY NO.

A2